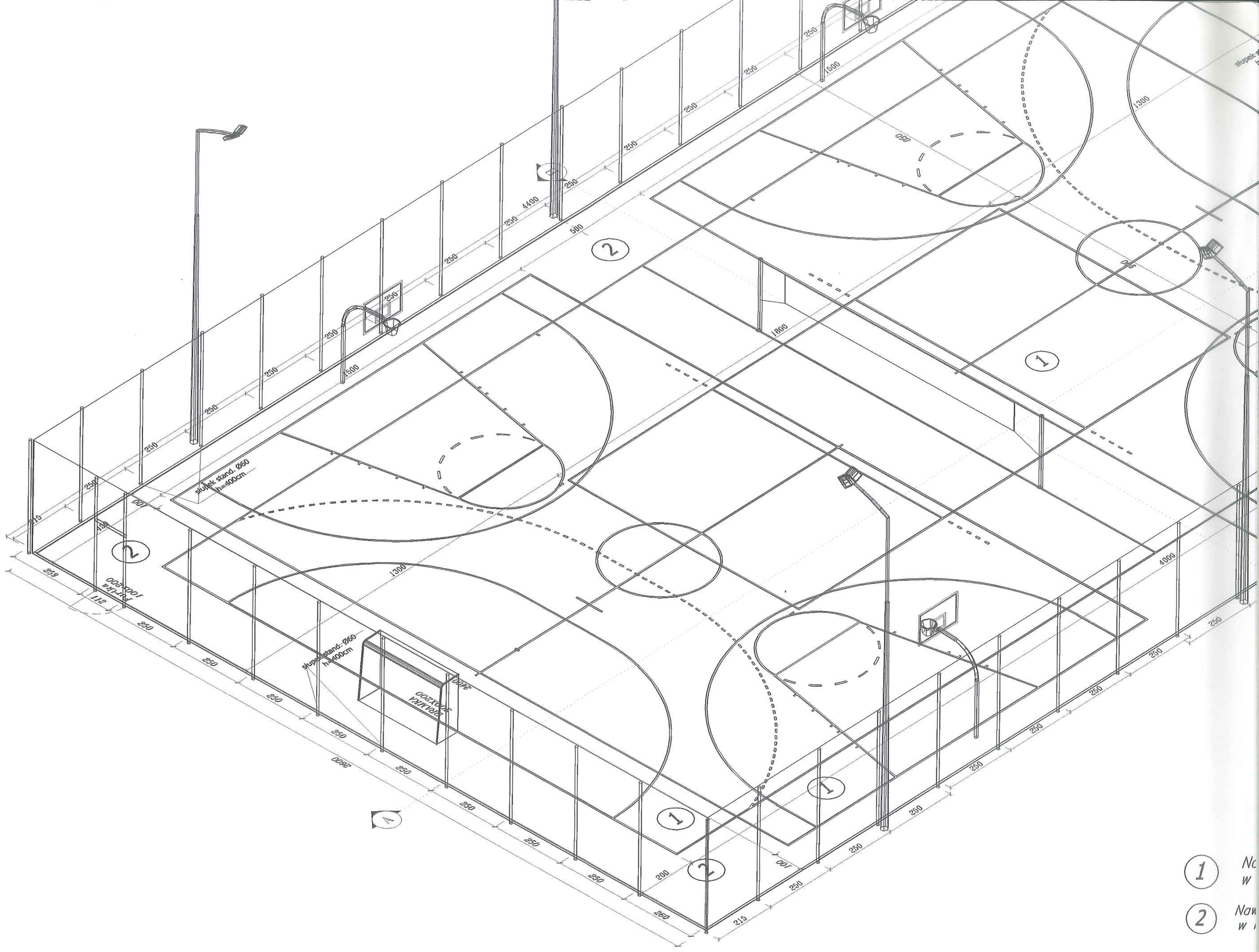

słupek stand. Ø60
h=400cm
BRAMKA
300x200
furtka
100x200
4400
500
1500
1800
1300
4000
2600
850
250
215
259
112
200
260
100
150
400
1
2
A