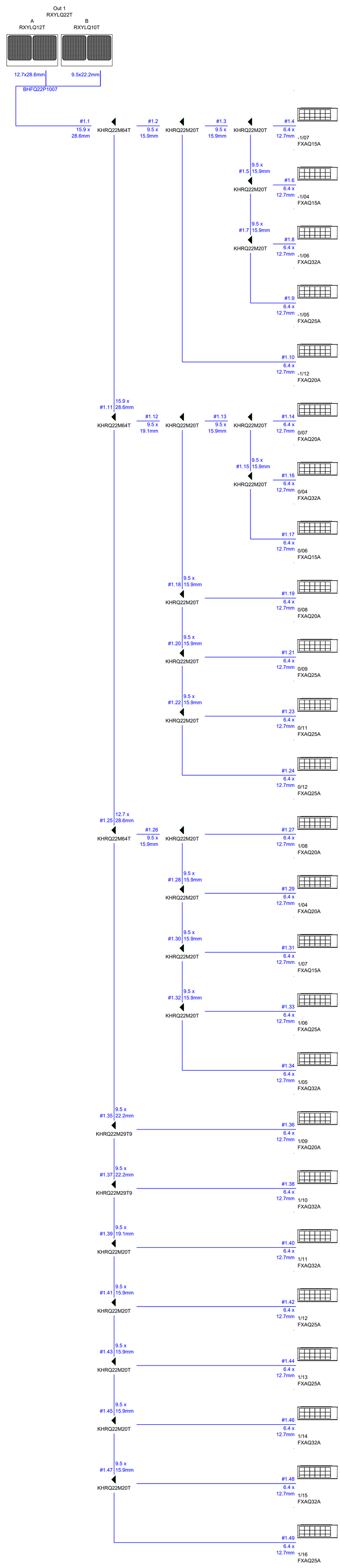
Out 1
RXYLQ22T
A
RXYLQ12T
B
RXYLQ10T
12.7x28.6mm
9.5x22.2mm
BHFQ22P1007
#1.1
15.9 x
28.6mm
KHRQ22M64T
#1.2
9.5 x
15.9mm
KHRQ22M20T
#1.3
9.5 x
15.9mm
KHRQ22M20T
#1.4
6.4 x
12.7mm
-1/07
FXAQ15A
9.5 x
#1.5
15.9mm
KHRQ22M20T
#1.6
6.4 x
12.7mm
-1/04
FXAQ15A
9.5 x
#1.7
15.9mm
KHRQ22M20T
#1.8
6.4 x
12.7mm
-1/06
FXAQ32A
#1.9
6.4 x
12.7mm
-1/05
FXAQ25A
#1.10
6.4 x
12.7mm
-1/12
FXAQ20A
15.9 x
#1.11
28.6mm
KHRQ22M64T
#1.12
9.5 x
19.1mm
KHRQ22M20T
#1.13
9.5 x
15.9mm
KHRQ22M20T
#1.14
6.4 x
12.7mm
0/07
FXAQ20A
9.5 x
#1.15
15.9mm
KHRQ22M20T
#1.16
6.4 x
12.7mm
0/04
FXAQ32A
#1.17
6.4 x
12.7mm
0/06
FXAQ15A
9.5 x
#1.18
15.9mm
KHRQ22M20T
#1.19
6.4 x
12.7mm
0/08
FXAQ20A
9.5 x
#1.20
15.9mm
KHRQ22M20T
#1.21
6.4 x
12.7mm
0/09
FXAQ25A
9.5 x
#1.22
15.9mm
KHRQ22M20T
#1.23
6.4 x
12.7mm
0/11
FXAQ25A
#1.24
6.4 x
12.7mm
0/12
FXAQ25A
12.7 x
#1.25
28.6mm
KHRQ22M64T
#1.26
9.5 x
15.9mm
KHRQ22M20T
#1.27
6.4 x
12.7mm
1/08
FXAQ20A
9.5 x
#1.28
15.9mm
KHRQ22M20T
#1.29
6.4 x
12.7mm
1/04
FXAQ20A
9.5 x
#1.30
15.9mm
KHRQ22M20T
#1.31
6.4 x
12.7mm
1/07
FXAQ15A
9.5 x
#1.32
15.9mm
KHRQ22M20T
#1.33
6.4 x
12.7mm
1/06
FXAQ25A
#1.34
6.4 x
12.7mm
1/05
FXAQ32A
9.5 x
#1.35
22.2mm
KHRQ22M29T9
#1.36
6.4 x
12.7mm
1/09
FXAQ20A
9.5 x
#1.37
22.2mm
KHRQ22M29T9
#1.38
6.4 x
12.7mm
1/10
FXAQ32A
9.5 x
#1.39
19.1mm
KHRQ22M20T
#1.40
6.4 x
12.7mm
1/11
FXAQ32A
9.5 x
#1.41
15.9mm
KHRQ22M20T
#1.42
6.4 x
12.7mm
1/12
FXAQ25A
9.5 x
#1.43
15.9mm
KHRQ22M20T
#1.44
6.4 x
12.7mm
1/13
FXAQ25A
9.5 x
#1.45
15.9mm
KHRQ22M20T
#1.46
6.4 x
12.7mm
1/14
FXAQ32A
9.5 x
#1.47
15.9mm
KHRQ22M20T
#1.48
6.4 x
12.7mm
1/15
FXAQ32A
#1.49
6.4 x
12.7mm
1/16
FXAQ25A